Z81T Z82T 2"-6" | DN50-DN150 | CLASS 150/300

High Temperature Trunnion Ball 2 Piece Up to 538°C (1000°F)

Valve dimensions

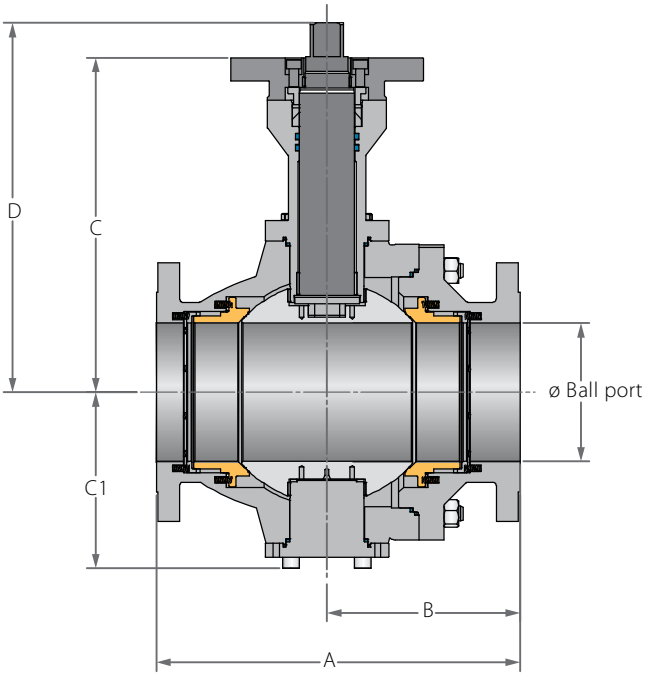

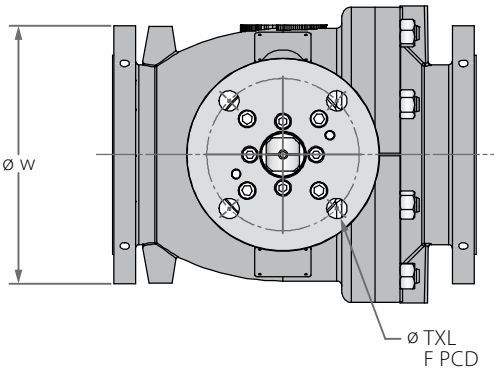

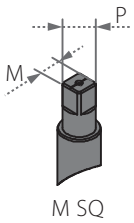

Full port	Unit	Ball port	A		B		C	C1	D	W		M SQ	P SQ	F		TxL	Weight kg/ib		Kv/Cv	
			150	300	150	300				150	300						150	300	150	300
DN50	mm	49.00	178.00	216.00	89.00	113.50	250.00	94.00	269.00	150.00	165.00	16.90	21.30	(F10)	102.00	M10X15 (4 holes)	22	25	400	363
2"	inch	1.93	7.01	8.50	3.50	4.47	9.84	3.70	10.59	5.91	6.50	0.67	0.84		4.02		49	55	463	420
DN80	mm	74.00	203.00	283.00	101.50	154.00	277.00	117.00	301.00	190.00	210.00	21.90	26.90	(F12)	125.00	M12X15 (4 holes)	40	51	1125	952
3"	inch	2.91	7.99	11.14	4.00	6.06	10.91	4.61	11.85	7.48	8.27	0.86	1.06		4.92		88	112	1300	1100
DN100	mm	100.00	229.00	305.00	114.50	164.50	293.00	139.00	322.00	230.00	255.00	26.90	34.90	(F14)	140.00	M16X15 (4 holes)	61	73	2154	1860
4"	inch	3.94	9.02	12.00	4.51	6.48	11.54	5.47	12.68	9.06	10.04	1.06	1.37		5.51		134	161	2490	2150
DN150	mm	150.00	394.00	403.00	209.10	207.60	362.00	191.00	400.00	280.00	320.00	35.90	46.20	(F16)	165.00	M22X25 (4 holes)	133	145	4723	4628
6"	inch	5.91	15.51	15.87	8.23	8.17	14.25	7.52	15.75	11.02	12.60	1.41	1.82		6.50		293	320	5460	5350

High Temperature Trunnion Ball 2 Piece Up to 538°C (1000°F)

Valve dimensions

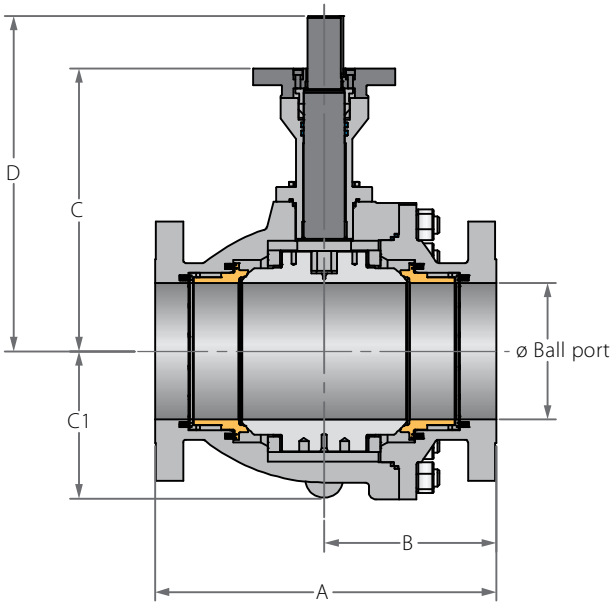

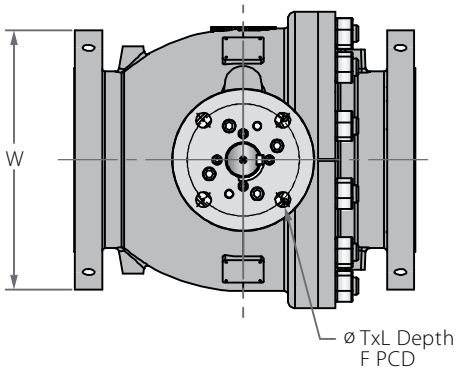

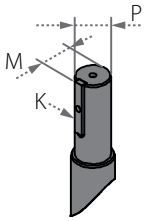

Full port	Unit	Ball port	A		B		C	C1	D	W		P	M	K	F		TxL	Weight kg/ib		Kv/Cv	
			150	300	150	300				150	300							150	300	150	300
DN200	mm	201.00	457.00	502.00	228.50	253.00	416.00	215.00	493.00	345.00	380.00	50.00	54.00	14.00	(F16)	165.00	22x25 (4 holes)	250	288	9273	8737
8"	inch	7.91	17.99	19.76	9.00	9.96	16.38	8.46	19.41	13.58	14.96	1.97	2.13	0.55		6.50		551	635	10720	10100
DN250	mm	252.00	533.00	568.00	270.00	287.50	504.00	260.00	581.00	405.00	445.00	50.00	54.00	14.00	(F25)	254.00	18x25 (8 holes)	405	475	15224	14792
10"	inch	9.92	20.98	22.36	10.63	11.32	19.84	10.24	22.87	15.94	17.52	1.97	2.13	0.55		10.00		893	1047	17600	17100
DN300	mm	303.00	610.00	648.00	298.00	313.00	590.00	300.00	671.00	485.00	520.00	60.00	63.50	18.00	(F25)	254.00	18x25 (8 holes)	595	672	23096	22404
12"	inch	11.93	24.02	25.51	11.73	12.32	23.23	11.81	26.42	19.09	20.47	2.36	2.50	0.71		10.00		1312	1481	26700	25900

Z81T Z82T 2"-6"

High Temperature Trunnion Ball 2 Piece Up to 538°C (1000°F)

Components & materials

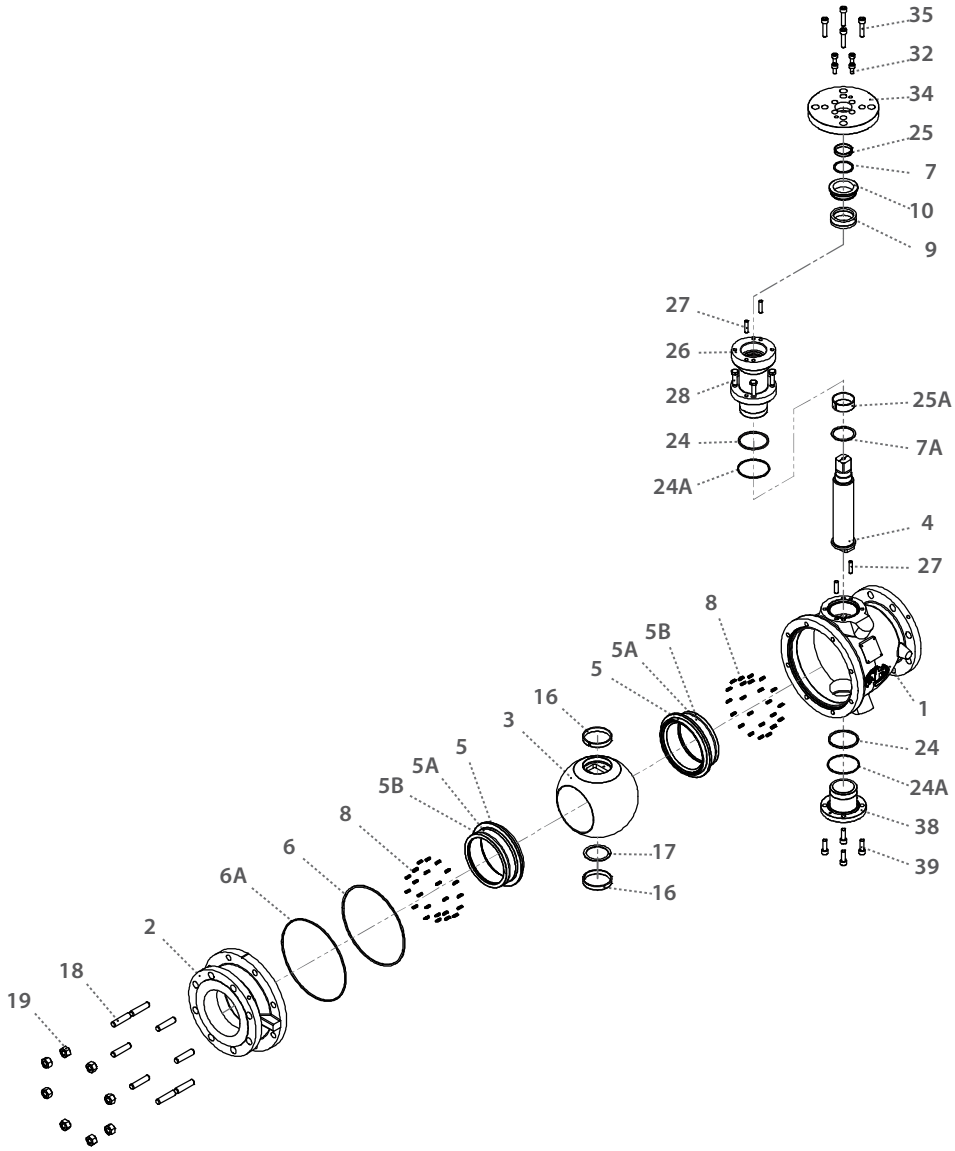

Item	Description	Material Spec. ASTM	Qty.
1	Body	Acc. Ordering Code	1
2	End	Acc. Ordering Code	1
3	Ball	Acc. Ordering Code	1
4	Stem	Acc. Ordering Code	1
5*	Seat	Acc. Ordering Code	2
5A*	Seat seal	Graphite	2
5B*	Seat ring	Acc. Ordering Code	2
6*	Body inner seal	Graphite	1
6A*	00-91-60-239	Graphite	1
7	Upper thrust seal	S.steel 316 / Inconel 625	1
7A	Lower thrust seal	S.steel 316 / Inconel 625	1
8	Seat Spring	Inconel X750	16-48
9*	Stem seal	Graphite	1
10	Follower	S.steel	1
16	Ball bearing	S.steel 316 / Inconel 625	2
17	Ball thrust seal	S.steel 316 / Inconel 625	1

Item	Description	Material Spec. ASTM	Qty.
18	Body stud	A193-B8M / A320 L7	4-12
19	Body nuts	A194 8M / A194 L7	4-12
24*	Bonnet inner seal	Graphite	2
24A*	48G-20-139	Graphite	2
25	Upper stem bearing	S.steel 316 / Inconel 625	1
25A	Lower stem bearing	S.steel 316 / Inconel 625	1
26	Bonnet	S. steel / C. steel	1
27	Bonnet pin	S. steel / C. steel	4
28	Bonnet bolts	A193-B8M / A320 L7	4-8
32	Follower drive bolts	A193-B8M / A320 L7	4-8
34	Iso plate	S. steel / C. steel	1
35	Iso plate bolts	A193-B8M / A320 L7	4-8
38	External trunnion	S. steel / C. steel	1
39	External trunnion bolts	A193-B8M / A320 L7	4-8

* Repair kit components

Z81T Z82T 8"-12"

High Temperature Trunnion Ball 2 Piece Up to 538°C (1000°F)

Components & materials

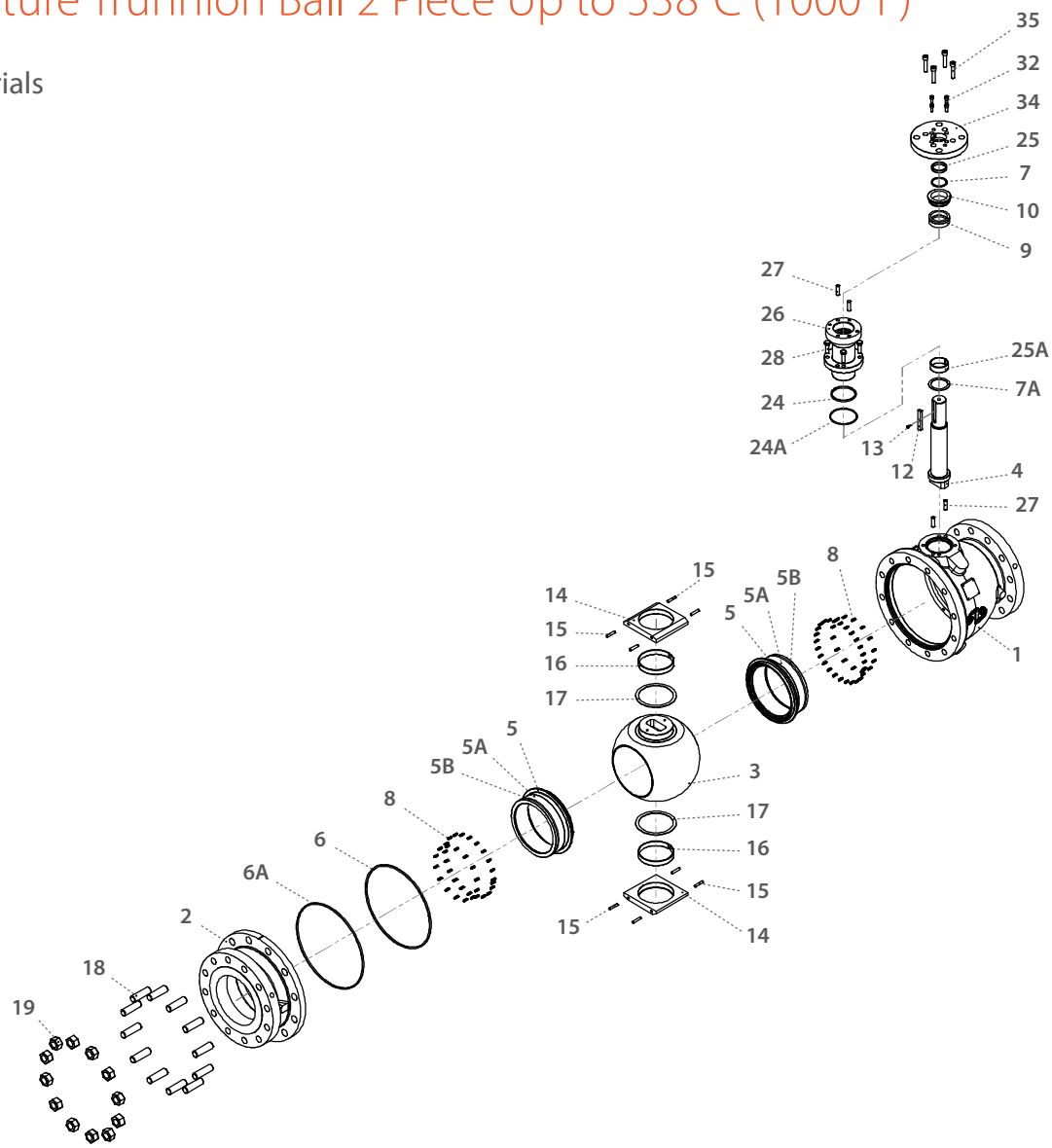

Item	Description	Material Spec. ASTM	Qty.
1	Body	Acc. Ordering code	1
2	End	Acc. Ordering code	1
3	Ball	Acc. Ordering code	1
4	Stem	Acc. Ordering code	1
5*	Seat	Acc. Ordering code	2
5A*	Seat seal	Graphite	2
5B*	Seat ring	Acc. Ordering code	2
6*	Body inner seal	Graphite	1
6A*	Body outer seal	Graphite	1
7	Upper thrust seal	S.steel 316 / Inconel 625	1
7A	Lower thrust seal	S.steel 316 / Inconel 625	1
8	Seat Spring	Inconel X750	68-76
9*	Stem seal	Graphite	1
10	Follower	S.steel	1
12	Stem key	S.steel / C.steel	1
13	Stem key bolt	S.steel / C.steel	1
14	Trunnion plate	S.steel / C.steel	2

Item	Description	Material Spec. ASTM	Qty.
15	Trunnion plate pin	S.steel / C.steel	8
16	Ball bearing	S.steel 316 / Inconel 625	2
17	Ball thrust washer	S.steel 316 / Inconel 625	2
18	Body stud	A193-B8M / A320 L7	8-20
19	Body nuts	A194 8M / A194 L7	8-20
24*	Bonnet inner seal	Graphite	1
24A*	Bonnet outer seal	Graphite	1
25	Upper stem bearing	S.steel 316 / Inconel 625	1
25A	Lower stem bearing	S.steel 316 / Inconel 625	1
26	Bonnet	S.steel / C.steel	1
27	Bonnet pin	S.steel / C.steel	4
28	Bonnet bolts	A193-B8M / A320 L7	4-8
32	Follower drive bolts	A193-B8M / A320 L7	4-8
34	Iso plate	S.steel / C.steel	1
35	Iso plate bolts	A193-B8M / A320 L7	4-8

* Repair kit components