Control Flanged Floating Ball

Valve dimensions

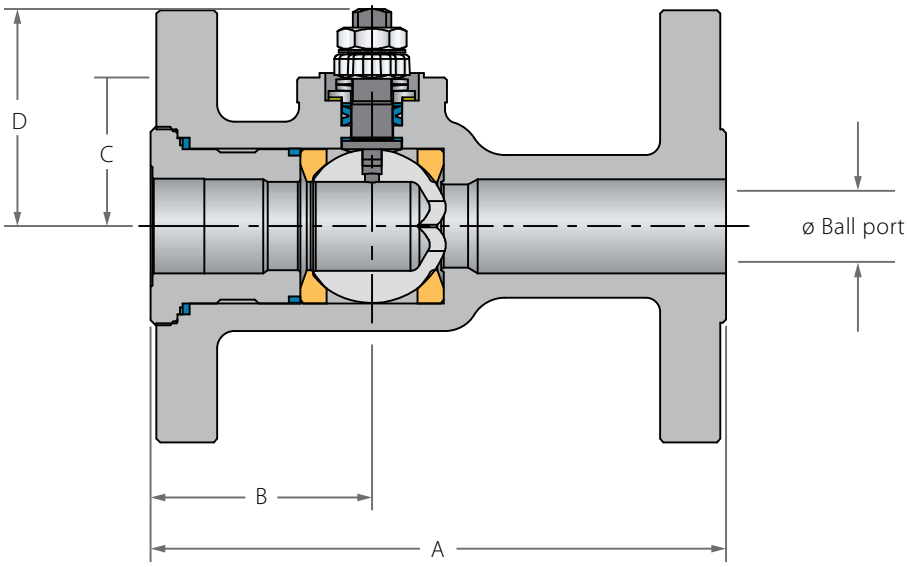

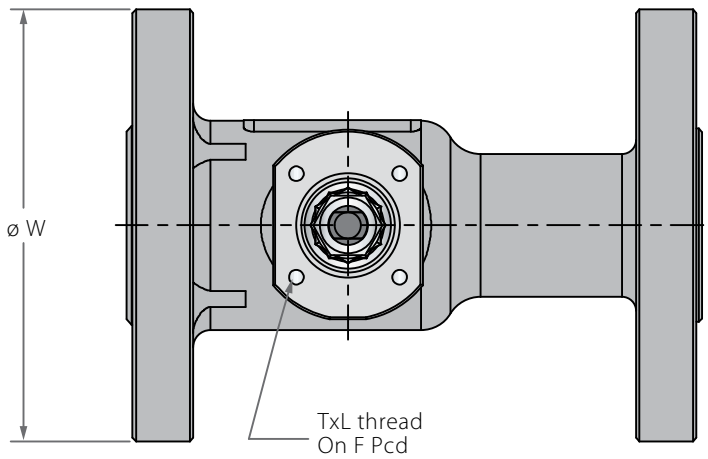

Preparation for actuation

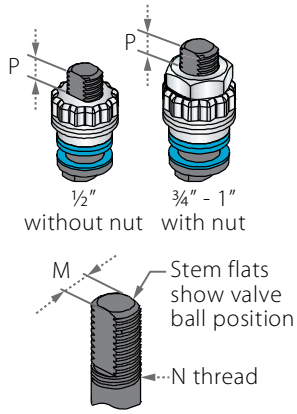

Std. port	Unit	Ball port	A		B	C	D	W		M	N	P	F		TxL	Weight kg/lb	
			150	300				150	300							150	300
DN15	mm	14.30	108.00	140.00	47.00	31.40	40.50	89.00	95.00	5.54	[illegible]"UNF	11.10	(F03)	36.00	M5x10	1.80	2.30
½"	inch	0.56	4.25	5.51	1.85	1.24	1.59	3.50	3.74	0.22		0.44		1.42		4.00	5.10
DN20	mm	20.60	117.00	152.00	57.00	38.20	55.60	98.00	117.00	7.54	[illegible]16"UNF	15.40	(F04)	42.00	M5x10	2.20	3.30
¾"	inch	0.81	4.61	5.98	2.24	1.50	2.19	3.86	4.61	0.30		0.61		1.65		4.80	7.30
DN25	mm	25.40	127.00	165.00	62.00	42.70	60.30	108.00	124.00	7.54	7/16"UNF	15.40	(F04)	42.00	M5x10	3.20	4.60
1"	inch	1.00	5.00	6.50	2.44	1.68	2.37	4.25	4.88	0.30		0.61		1.65		7.00	10.10

Control Flanged Floating Ball

Valve dimensions

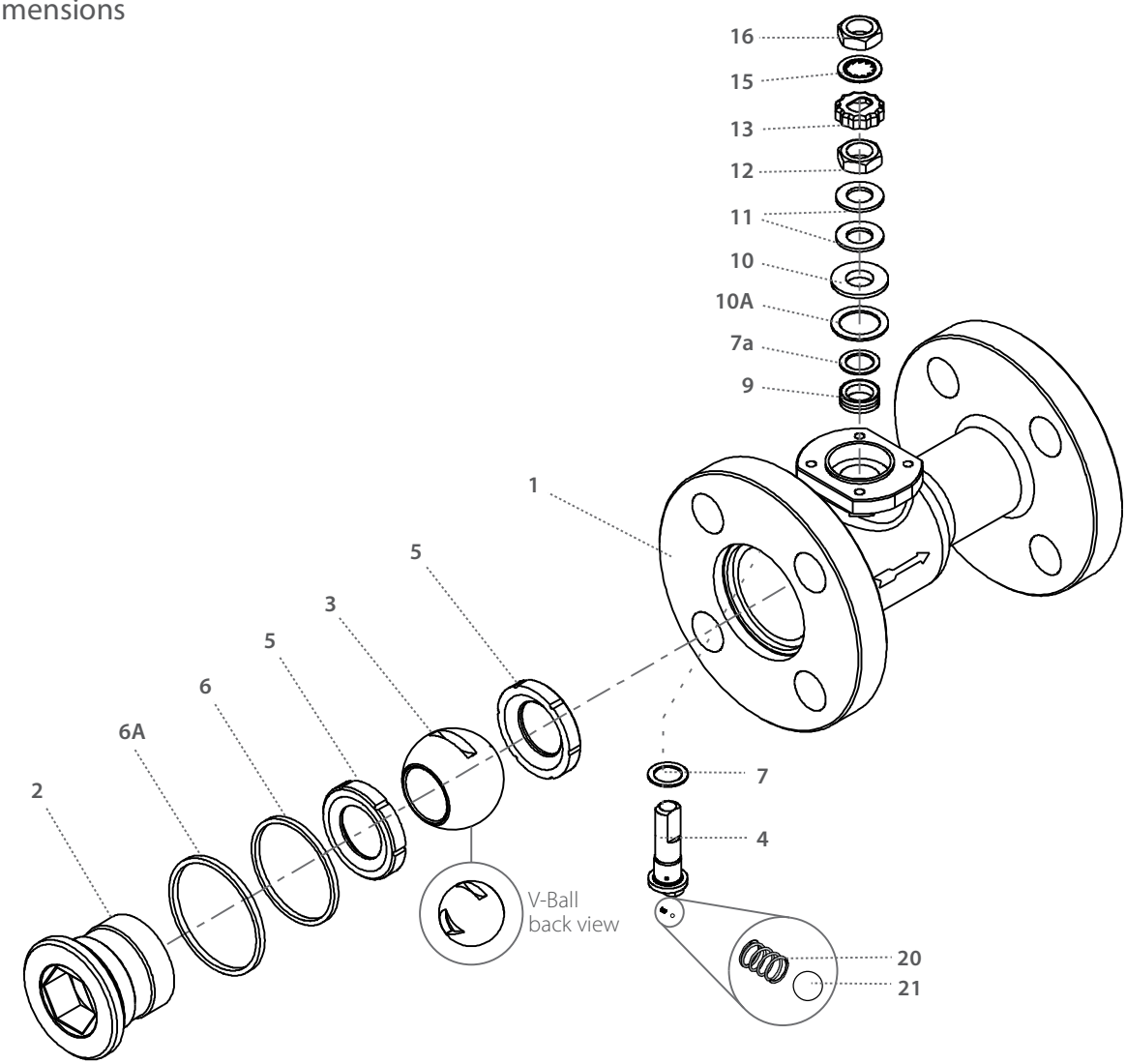

Item	Description	Material specification	Qty.
1	Body	Acc. Ordering Code	1
2	Insert	Acc. Ordering Code	1
3	V-Ball	Acc. Ordering Code	1
4	Stem	Acc. Ordering Code	1
5*	Seat	Acc. Ordering Code	2
6*	Body seal	PTFE	1
6A*	Outer seal	Acc. Ordering Code	1
7*	Stem thrust seal	CF PEEK, PCTFE, CF PTFE	1
7a*	Anti-abrasion ring	CF PEEK, PCTFE, CF PTFE	1
9*	Stem seal	CF PTFE, TFM	1
10	Follower	S. Steel	1

Item	Description	Material specification	Qty.
10A*	Slide bearing	S. Steel	1
11	Disc spring	S. Steel	2
12	Stem nut	S. Steel	1
13	Locking clip	S. Steel	1
15	Serrated washer	S. Steel	1
16	Handle nut	S. Steel	1
20	Anti-static spring	S. Steel	1
21	Anti-static plunger	S. Steel	1
22	Arrow Flow	S. Steel	1
23	Tag (not shown)	S. Steel	1

* Standard items supplied in repair kits

Control Flanged Floating Ball

Valve dimensions

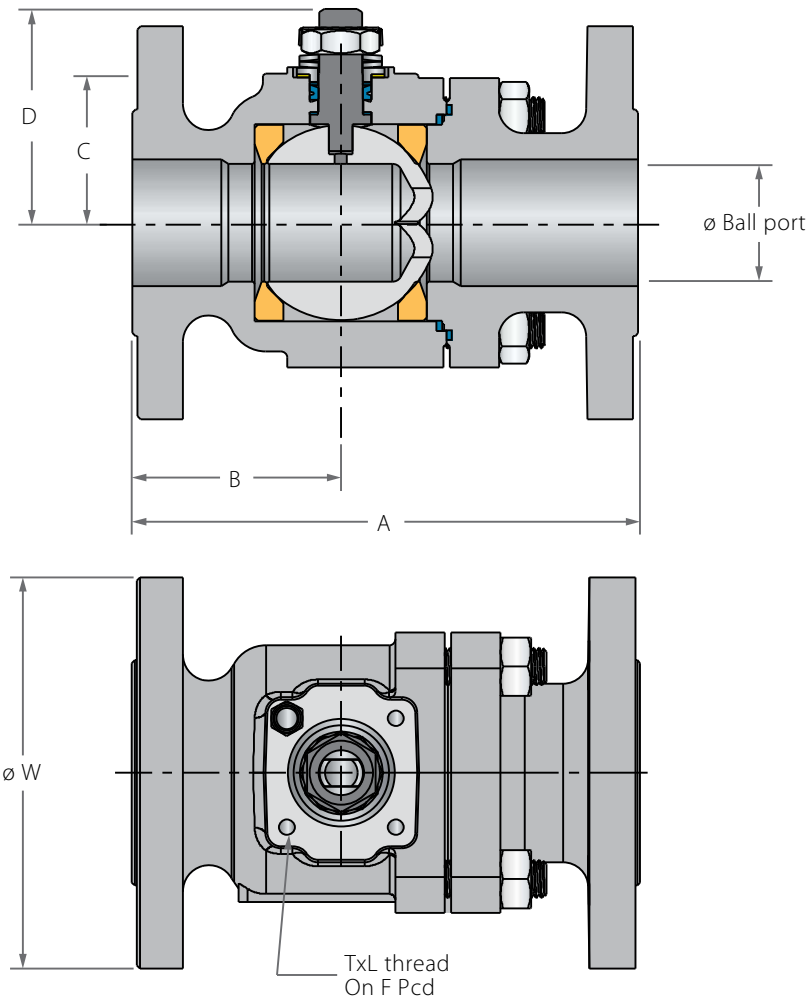

Preparation for actuation

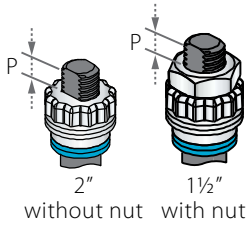

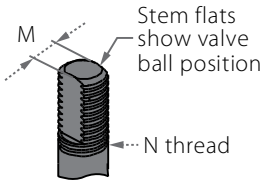

Std. port	Unit	Ball port	A		B		C	D	W		M	N	P	F		TxL	Weight kg/lb	
			150	300	150	300			150	300							150	300
DN15	mm	38.10	165.00	190.00	97.00	110.00	48.30	77.80	127.00	156.00	8.71	5/16" UNF	8.50	(F05)	50.00	M6x12	6.60	10
1½"	inch	1.50	6.50	7.50	3.82	4.33	1.90	3.06	5.00	6.14	0.34		0.33		1.97		14.50	22
DN50	mm	50.00	178.00	216.00	109.00	141.00	70.00	88.00	152.00	165.00	8.71	9/16" UNF	13.50	(F07)	70.00	M8x12	13.00	15
2"	inch	2.00	7.00	8.50	4.29	5.55	2.75	3.46	5.98	6.50	0.34		0.53		2.76		28.60	33

Control Flanged Floating Ball

Valve dimensions

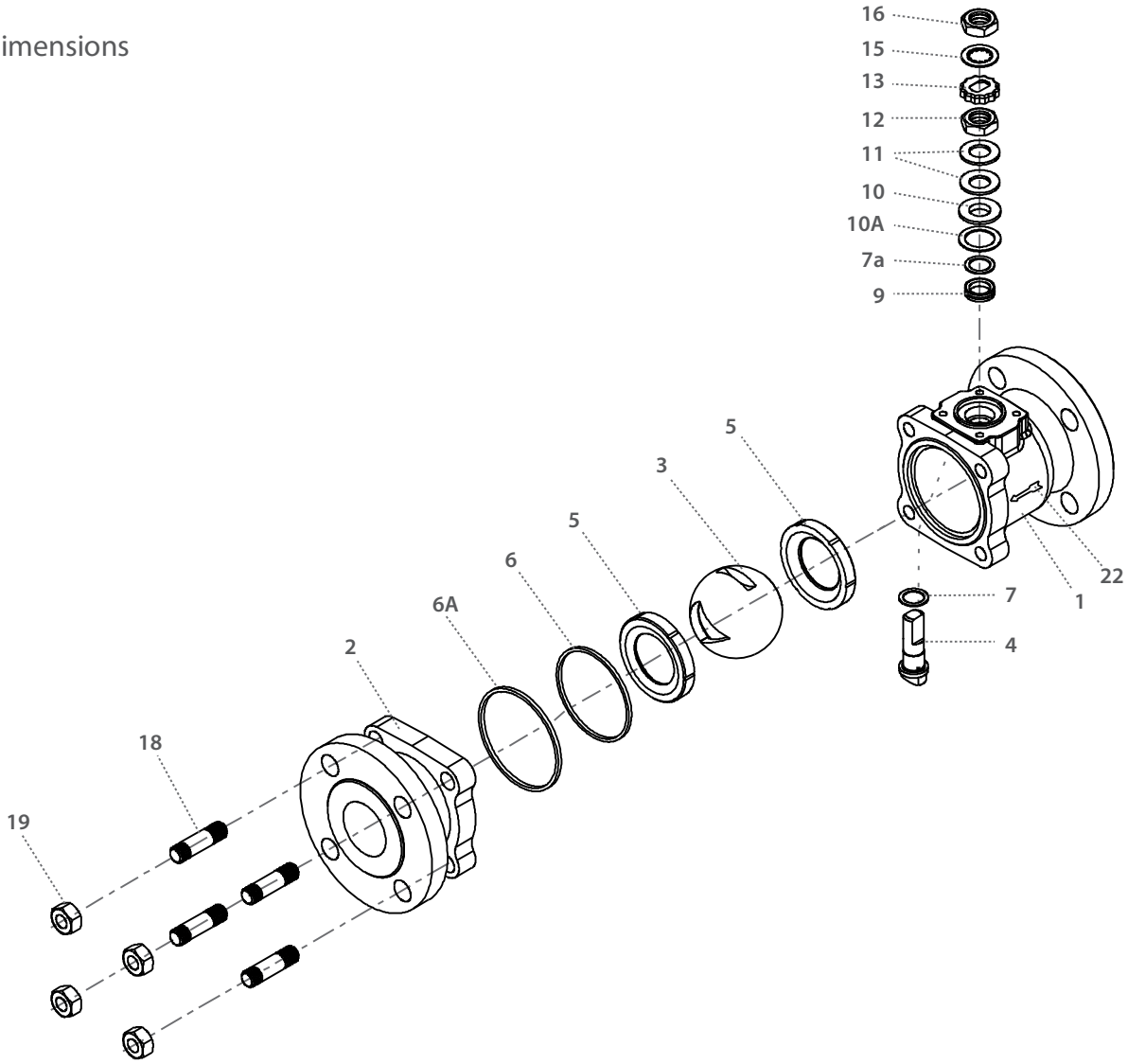

Item	Description	Material specification	Qty.
1	Body	Acc. Ordering Code	1
2	End	Acc. Ordering Code	1
3	V-Ball	Acc. Ordering Code	1
4	Stem	Acc. Ordering Code	1
5*	Seat	Acc. Ordering Code	2
6*	Body seal	PTFE	1
6A*	Outer seal	Acc. Ordering Code	1
7*	Stem thrust seal	CF PEEK, PCTFE, CF PTFE	1
7a*	Anti-abrasion ring	CF PEEK, PCTFE, CF PTFE	1
9*	Stem seal	CF PTFE, TFM	1
10	Follower	S. Steel	1
10a	Slide bearing	S. Steel	1

Item	Description	Material specification	Qty.
11	Disc spring	S. Steel	2
12	Stem nut	S. Steel	1
13	Locking clip	S. Steel	1
16	Handle nut	S. Steel	1
18	Studs	S. Steel	4
19	Body nuts	S. Steel	4
20	Anti-static spring	S. Steel	1
21	Anti-static plunger	S. Steel	1
22		S. Steel	1
23	Tag (not shown)	S. Steel	1

* Standard items supplied in repair kits

Control Flanged Floating Ball

Valve dimensions

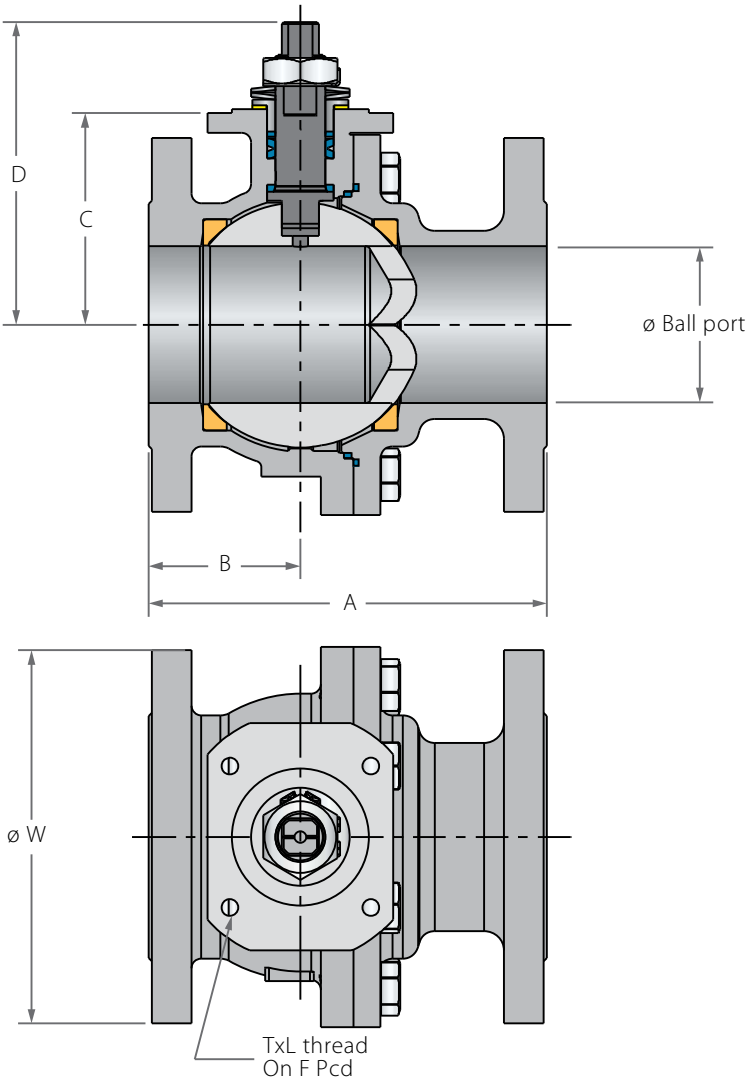

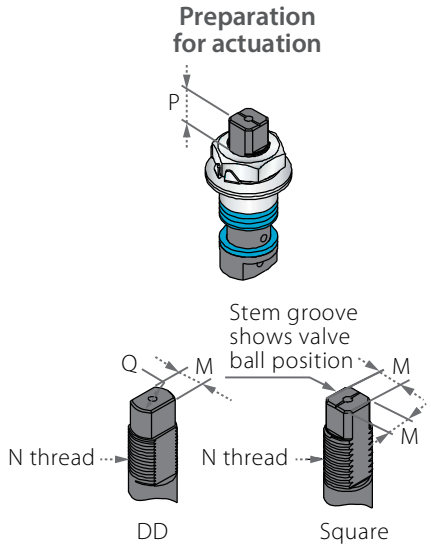

Std. port	Unit	Ball port	A		B		C	D	H	S	W		M	M-DO	N	P	Q	F		TxL	Weight kg/lb	
			150	300	150	300					150	300									150	300
DN80	mm	80.00	203.00	283.00	126.00	185.00	108.00	154.60	194.80	400.00	191.00	210.00	18.90	15.90	1" -14 UNF-2A	16.70	22.70	(F10)	102.00	M10x20	26	29
3"	inch	3.25	8.00	11.14	4.96	7.28	4.25	6.08	7.67	15.75	7.52	8.27	0.74	0.63		0.66	0.89		4.02		57	64
DN100	mm	100.00	229.00	305.00	144.00	200.00	124.00	170.60	211.00	610.00	230.00	254.00	18.90	15.90	1" -14 UNF-2A	16.70	22.70	(F10)	102.00	M10x20	34	39
4"	inch	3.94	9.00	12.01	5.67	7.87	4.88	6.71	8.31	24.00	9.06	10.00	0.74	0.63		0.66	0.89		4.02		75	86
DN150	mm	150.00	394.00	403.00	230.00	229.00	179.00	248.50	308.00	916.00	328.00	328.00	28.45	23.75	1½" -12 UNF-1A	26.20	35.20	(F12)	125.00	M12x20	71	78
6"	inch	5.91	15.51	15.87	9.06	9.02	7.05	9.78	12.12	36.00	12.91	12.91	1.12	0.94		1.03	1.39		4.92		156	172
DN200	mm	200.00	457.20	403.50	215.00	261.00	241.00	353.70	-	-	450.00	450.00	35.92	35.92	2"-8 UN-2A	37.50	46.50	(F14)	140.00	M16x30	190	225
8"	inch	7.87	18.00	15.89	8.46	10.28	9.49	13.93	-	-	17.72	17.72	1.41	1.41		1.48	1.83		5.51		419	496

Control Flanged Floating Ball

Valve dimensions

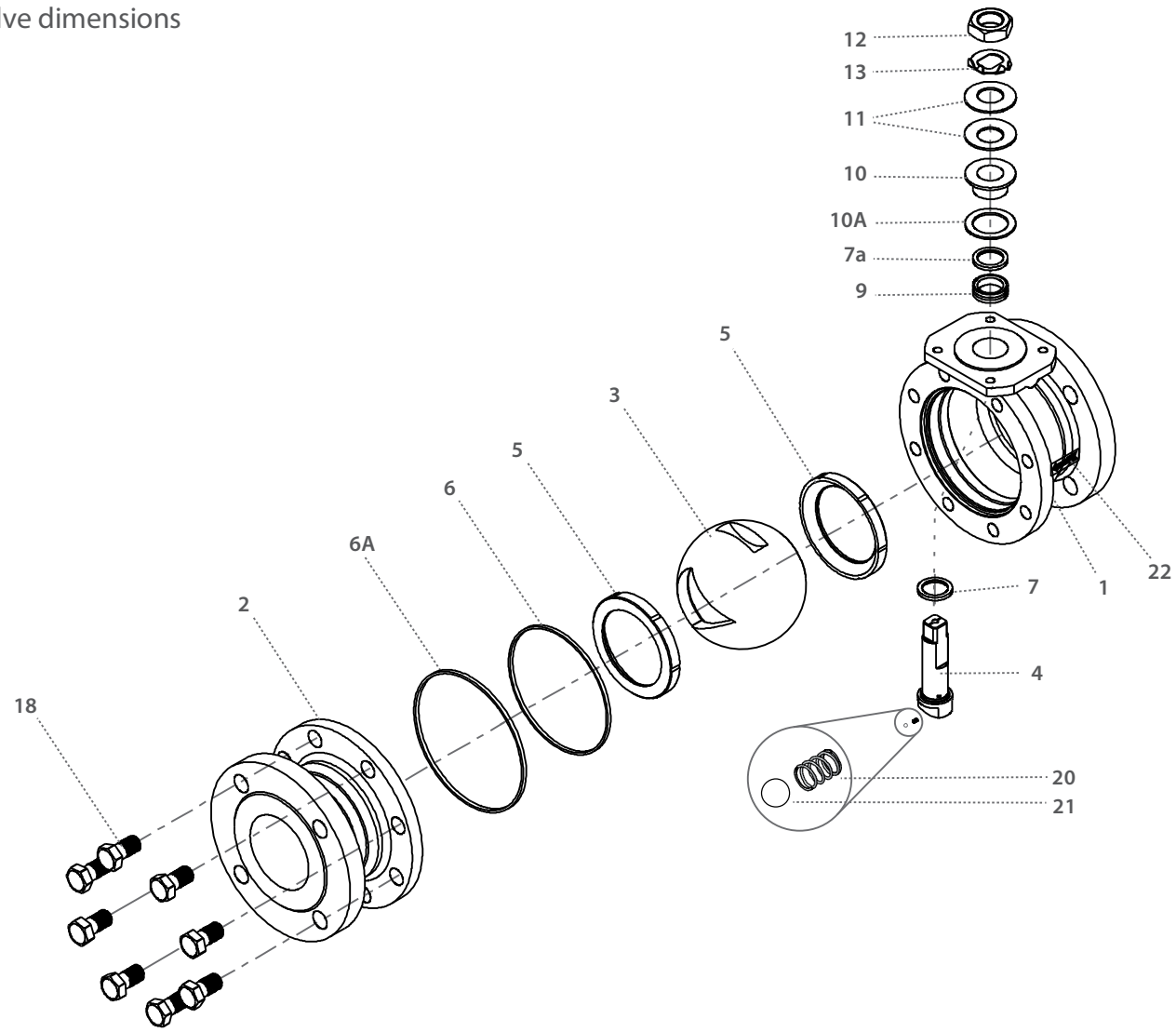

Item	Description	Material specification	Qty.
1	Body	Acc. Ordering Code	1
2	End	Acc. Ordering Code	1
3	V-Ball	Acc. Ordering Code	1
4	Stem	Acc. Ordering Code	1
5*	Seat	Acc. Ordering Code	2
6*	Body seal	PTFE	1
6A*	Outer seal	Acc. Ordering Code	1
7*	Stem thrust seal	CF PEEK, PCTFE, CF PTFE	1
7a*	Anti-abrasion ring	CF PEEK, PCTFE, CF PTFE	1
9*	Stem seal	CF PTFE, TFM	1
10	Follower	S. Steel	1

Item	Description	Material specification	Qty.
10A	Slide bearing	S. Steel	1
11	Disc spring	S. Steel	2
12	Stem nut	S. Steel	1
13	Tab lock washer	S. Steel	1
18	Bolt	S. Steel	8-12
20	Anti-static spring	S. Steel	1
21	Anti-static plunger	S. Steel	1
22		S. Steel	1
23	Tag (not shown)	S. Steel	1

* Standard items supplied in repair kits